STAR VOICE

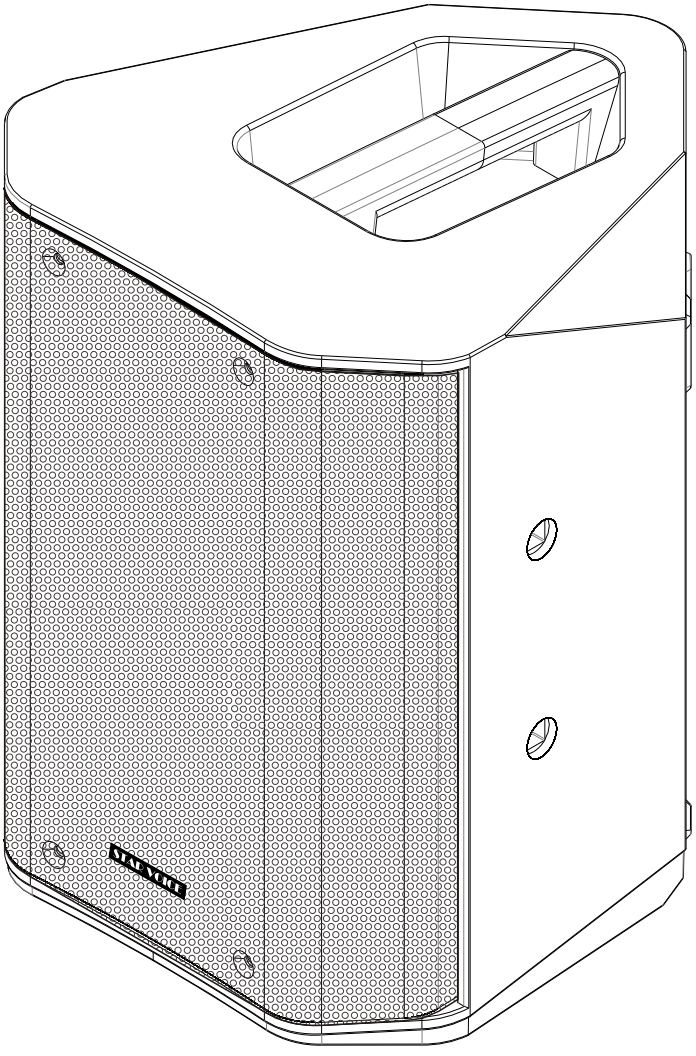

SV-1

Owner's Guide

O W N E R ' S G U I D E

www.techtop.co.il

Please read and keep all safety and use instructions.

Important Safety Instructions

Refer to the owner's guide for more information about your SV-1

1. Read these instructions.
2. Keep these instructions.
3. Heed all warnings.
4. Follow all instructions.
5. Do not use this apparatus near water.
6. Clean only with a dry cloth.
7. Do not block any ventilation openings. Install in accordance with the manufacturer's instructions.
8. Do not install near any heat sources such as radiators, heat registers, stoves, or other apparatus (including amplifiers) that produces heat.
9. Do not defeat the safety purpose of the polarized or grounding-type plug. A polarized plug has two blades with one wider than the other. A grounding-type plug has two blades and a third grounding prong. The wider blade or third prong is provided for your safety. If the provided plug does not fit in your outlet, consult an electrician for replacement of the obsolete outlet.
10. Protect the power cord from being walked on or pinched, particularly at plugs, convenience receptacles and the point where it exits from the apparatus.
11. Only use attachments/accessories specified by the manufacturer.
12. Use only with the cart, stand, tripod, bracket or table specified by the manufacturer or sold with the apparatus. When a cart is used, use caution when moving the cart/apparatus combination to avoid injury from tip-over.
13. Unplug this apparatus during lightning storms or when unused for long periods of time.
14. Refer all servicing to qualified personnel. Servicing is required when the apparatus has been damaged in any way such as power-supply cord or plug is damaged, liquid has been spilled or objects have fallen into the app aratus, the app aratus has been exp osed to rain or moisture, does not operate normally or has been dropped.

WARNINGS/CAUTIONS:

This symbol on the product means there is uninsulated, dangerous voltage within the product enclosure that may present a risk of electrical shock.

This symbol on the product means there are important operating and maintenance instructions in this guide.

Contains small parts which may be a choking hazard. Not suitable for children under age 3.

This product contains magnetic material. Consult your physician on whether this might affect your implantable medical device.

System Setup
Connections and Controls

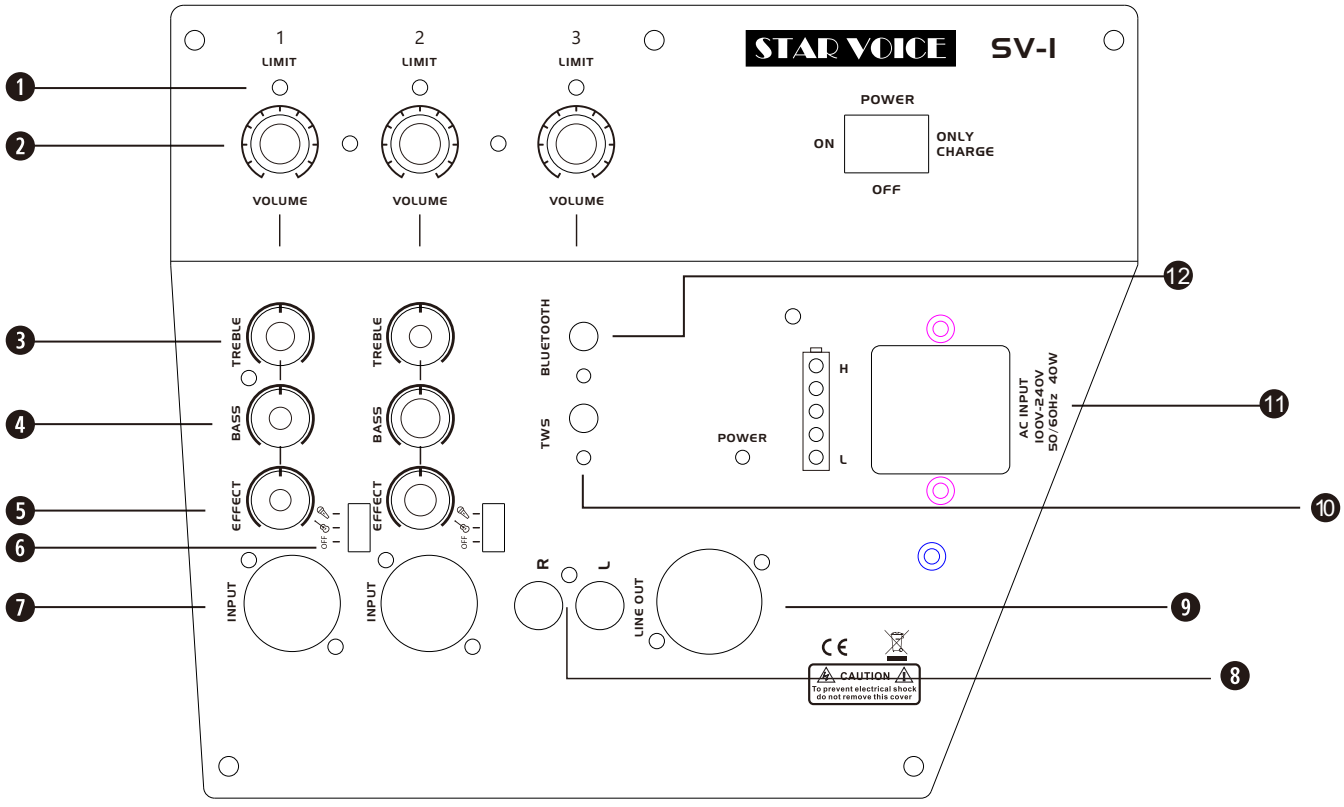

❶ **Signal/Clip indicator:** Displays the input signal status in color.
Green: Signal present.
Red: Signal clipping.

Note: *Reduce the corresponding volume control to prevent signal clipping.*

❷ **Volume control:** Adjust the volume of your microphone, instrument or audio source.

❸ **Treble control:** Adjust the high-frequency balance of your microphone or instrument.

❹ **Bass control:** Adjust the low-frequency balance of your microphone or instrument.

❺ **Reverb control:** Adjust the amount of reverb applied to your microphone or instrument.

❻ **Select switch:** Move the switch to the or position to select your guitar or microphone.

❼ **Channal input:** Analog input for connecting microphone (XLR) and instrument (TS unbalanced) cables.

❽ **RCA input:** These RCA jacks allows for the connection of line sources (i.e., mixer/audio interface bal/unbal line out) both for the Left and Right channel.

❾ **Line Output:** Use a ¼c TRS cable to connect the line-level output to the Channel 1 or 2 input of a second SV-1 to create a mono, two-loudspeaker setup.
Note: Line Out is post mix.

❿ **TWS:** Press the TWS button on the same time on both 2 SV-1, and wait them paired (one TWS LED blink slow, another one doesn't blink), then connect Bluetooth-capable devices to SV-1 to achieve stereo sound play.

⓫ **Power cord connector:** Connect the power cord to start setting the volume and playing music.

⓬ **Bluetooth Pair button:** Used to set up pairing with Bluetooth-capable devices, such as mobile phones, tablets and laptops.

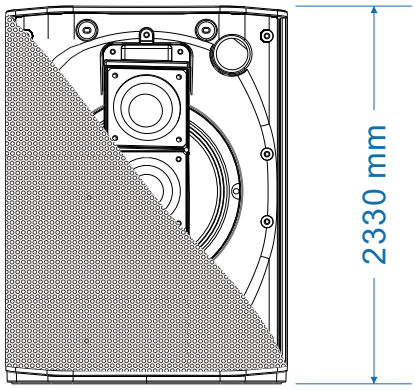

Front view

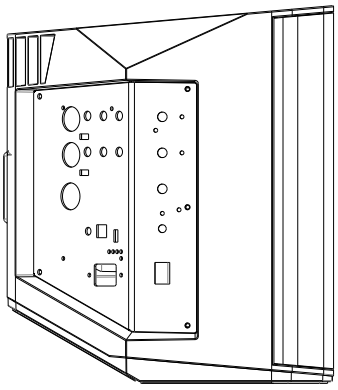

Left view

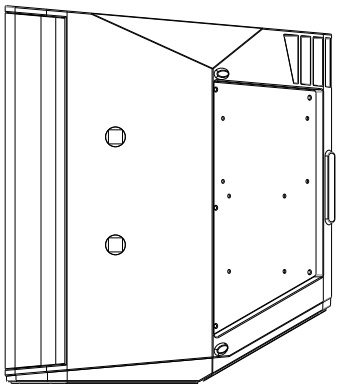

Right view

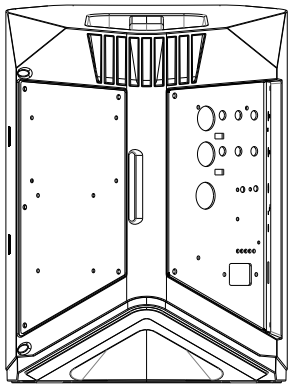

Rear view

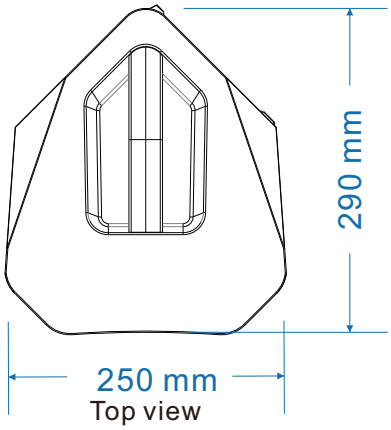

Top view

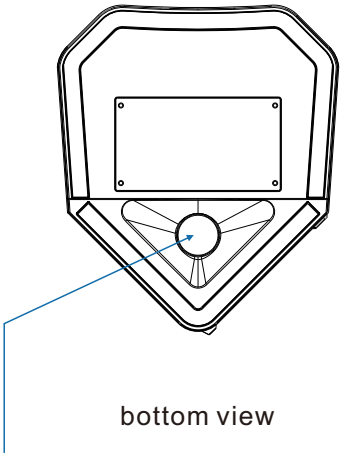

bottom view
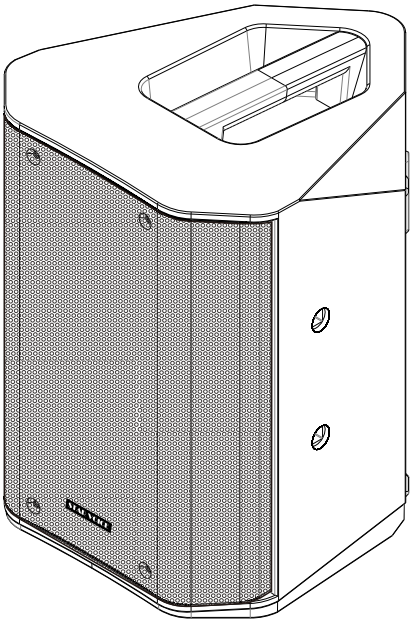
Model No.	SV-1
Type	An Unbeatable Multi-position PA System All-in-One Battery-powered
Transducer LF	1 * 6.5" subwoofer, 1.5" voice coil
Transducer HF	3 * 2.75", neodymium magnet, 1" voice coil
Frequency Response (-6dB)	60 Hz - 18 kHz
Max. SPL (1m, free space)	114 dB
Impedance	4Ohms
Amplification	Class D
Power Output (RMS)	120W
Number of Mixer Channels	3
Number of Mic Preamps	2
EQ	2-Band Channel EQ
Effects	Reverb
Inputs	2 * XLR / 6 .3mm Combo , / 1 * RCA Line in
Outpust	1*XLR line out
Bluetooth	Yes, and support Tws function
Enclosure Material	Polypropylene Plastic
Mounting Options	35mm pole mount, Tilt-back, Floor Monitor
Power Supply	110~240V 50/60HZ
Battery	Rechargeable Lithium--ion battery 6pcs 2600mAh 18650 (up to 6 hours play time)
Package Measure	36*32*41.5 cm
Gross Weight	8.85 kgs